# PETRO DAVVAR ENERGY

# Proximity Transducer System

Rev E
2021/09/05

API
IEC Ex

If there is a will, there is a way...

# Proximity Transducer System

## Introduction To Proximity System

**Proximity Systems Are Used to Measure the Static and Dynamic Distance Between the Object and The Probe. Petro Davvar Energy Pajohan Proximity Probes Measure the Following:**

- **Radial vibration.**
- **Axial thrust position Vibration**

**Our proximity probe system's designed under API 670 standard. Each system consists of a probe, extension cable, and a proximitor. Our Proximity Systems are Fully Replaceable with Vibrometer & VIBRAX & Bently Nevada 7200, 3300 And Metrix Products.**

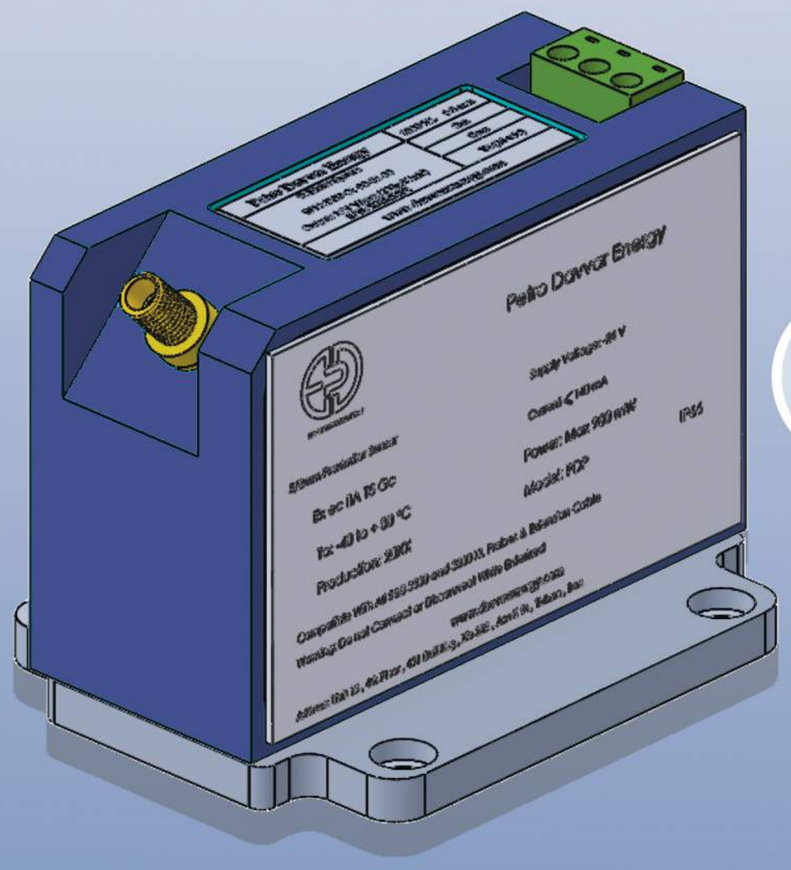


## Components Of Proximity Probe Transducers

### 1-Probe

**The PDS probes are designed for long life cycles, probe and extension cable are equipped with rubber which covers the connectors and prevents oil and dirt penetration.Our probes are compatible with 5& 9 meters.**

### 2-Driver

**The PDP driver is used for our proximity probe systems. The total length of cable between the probe and the driver should be 5m, or 9m.**

### 3-Extension Cable

**Our extension cable Model PDEC design results in better system performance and a longer life cycle.**
**The total length of the probe and the extension cable need to be 5m or 9m in total length.The connector on the extension cable is also an API 670 Standard, allowing compatibility with other manufacturers' proximity probe systems.**

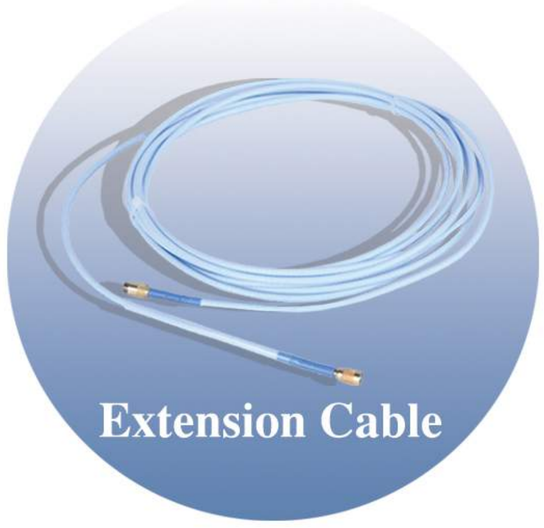


### EX Protection

**Our probe, proximitor and extension cable have Ex ecIIA T5 Gc protection.**

# Proximity Transducer System

## System Specifications

### Electrical

#### Power Supply

Voltage: -18 to -24 VDC Current: < 20mA
Linear Range: 2.0mm (80mils) begins at 0.25mm (10mils)
from probe face (AISI 4140) to 2.25mm (10 - 80 mils)

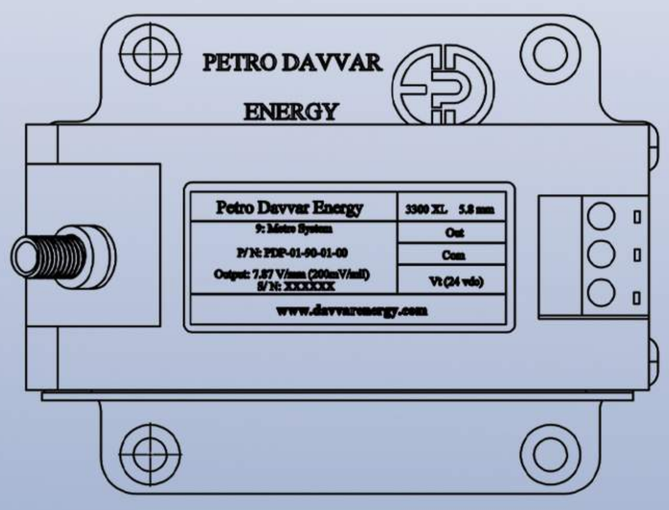


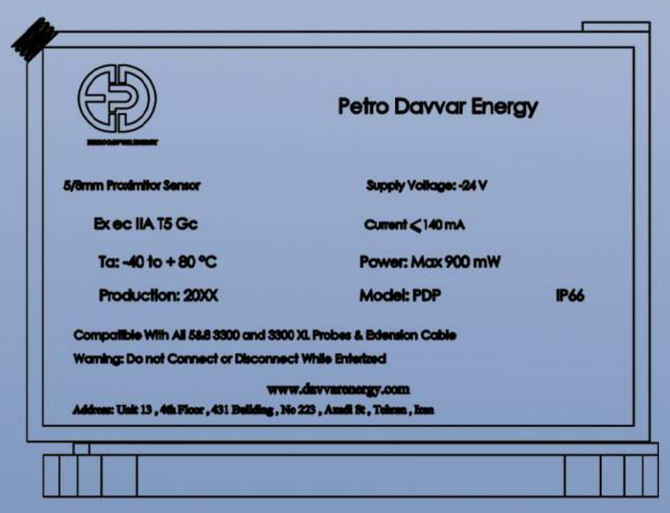


**Sensitivity**

| Components | Temperature | | Accuracy Requirements as a Function of Temperature | |
|---|---|---|---|---|
| | Testing Range | Operating/Storage Range | Within Testing Range | Outside Testing Range but Within Operating Range |
| Proximity Probes | 0 °C to 45 °C (32 °F to 110 °F) | -35 °C to 120 °C (-30 °F to 250 °F) | Incremental scale factor a: ± 5 % of 7.87 mV/µm (200 mV/mil) Deviation from straight line b :within ±25.4 µm (±1 mil) of the best fit straight line at a slope of 7.87 mV/µm (200 mV/mil) Minimum linear range: 2 mm (80 mil) | Incremental scale factor a: an additional ± 5 % of the testing range accuracy Deviation from straight line b :within ±76 µm (±3 mil) of the best fit straight line at a slope of 7.87 mV/µm (200 mV/mil) Minimum linear range: same as for testing range |
| Extension Cable | 0 °C to 45 °C (32 °F to 110 °F) | -35 °C to 120 °C (-30 °F to 250 °F) | | |
| Oscillator Demodulators | 0 °C to 45 °C (32 °F to 110 °F) | -35 °C to 120 °C (-30 °F to 250 °F) | | |

a )The incremental scale factor (ISF) error is the maximum amount the scale factor varies from 7.87 mV/⊠m(200 mV/mil) when measure at specified increments throughout the linear range. Measurements are usually taken at 250 ⊠m (10 mil) increments. ISF error is associated with errors in radial vibration and axial position readings.
b )The deviation from straight line (DSL) error is the maximum error (in mils) in the probe gap reading at a given voltage compared to a 7.87 mV/⊠m (200 mV/mil) best fit straight line.DSL errors are associated with errors in axial position or probe gap readings.

## Instructions

Field Wiring: Use 0.2 to 1.5 mm2 (16 To 24 AWG) 3 Conductor Shielded Wire. Recommended Gap Settings is Approximately 9 VDC (Approximately 1.3 mm Or 55 Mils).
Frequency: 0 To 10 KHZ.

Minimum Target Size (Shaft Diameter): 50.8 mm Or 2 Inch.
Probe Tip Material: Poly Phenylene Sulfide (PPS).
Maximum Tensile Strength Probe Case To Probe Lead Should Be 300 N.
Maximum Tensile Strength Probe Lead To Extension Cable Should Be 250 N.
Maximum Probe Case Torque: 21 N.m.
Maximum Connector Torque: 0.5 N.m.
All Connectors Are Finger Tighted.
The Proximitor Should Be Installed In Cool Box With at least IP54 Protection Because of Terminals the box should be electrically earthed.
All connections, terminals, earthing and calibration of system should be checked permanently.
The maximum tensile force is 5 N for input and output terminals and 100 N for cable, probe and proximitor.

## Dielectric Test

When supplied with terminals complete of wiring cables, the equipment have been. Submitted to the dielectric test in accordance with the clause 7.1 of EN 60079-7 with. The following values: 500 V r.m.s

| | |
|---|---|
| $-V_T$ & Body | 500 K < Ω < 300 K |
| $-V_T$ & Out | 1.2 M < Ω < 600 K |
| Out & Com | 1.2 M < Ω < 600 K |

## Environmental

Probe Driver Temperature: Operation: -40°C to +80°C
Probe Temperature:
Operation/Storage: -40°C to +177°C
Extension Cable Temperature:
Operation/Storage: -40°C to +177°C
Humidity: 100% non-condensing

# 3300 XL & 7200 , 5 & 8 mm Proximity Probes

## How to Order a Probe model PDS

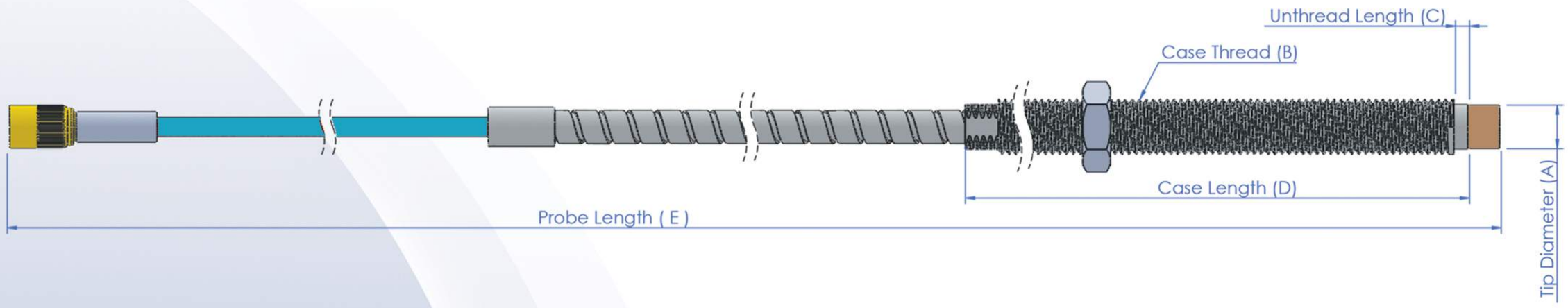


| Model No. | Tip Diameter A | Case Thread B | Unthread Length C | Case Overall Length D | Probe Length E | Armor F | EX Approval G |
|---|---|---|---|---|---|---|---|
| **PDS-XXXX** | **A XX** | **B XX** | **C XXX** | **D XXX** | **E XX** | **F XX** | **G XX** |
| **3300 XL**<br>Or<br>**7200** | **05:** 5mm | **10:** 1/4"-28 | **Min:** 0.0 inch<br>**Max:** 8.8 inch<br>**Increments length:** 0.1 inch<br>**Example: 05** = 0.5 inch | **Min:** 0.8 inch<br>**Max:** 9.6 inch<br>**Increments length:** 0.1 inch<br>**Example: 12** = 1.2 inch | **05:** 0.5m (1.6 feet)<br>**10:** 1m (3.3 feet)<br>**15:** 1.5m (4.9 feet)<br>**20:** 2m (6.6 feet)<br>**50:** 5m (164 feet)<br>**90:** 9m (29.5 feet) | **00**: Non Armored<br>**01**: Armored | **00**: Not EX<br>**01**: EX Approval |
| | | **20:** M8 x 1 | **Min:** 0.0 mm<br>**Max:** 230 mm<br>**Increments Length** = 10 mm<br>**Example: 10** = 10 mm | **Min :**20mm<br>**Max:** 250mm<br>**Increments Length** = 10mm<br>**Example:** 80 = 80mm | | | |
| | **08:** 8mm | **30:** 3/8"-24 | **Min:** 0.0 inch<br>**Max:** 8.8 inch | **Min:** 0.8 inch<br>**Max :** 9.6 inch | | | |
| | | **31:** 3/8"-24 (Reverse Mount) | **02** = 0.2 inch | **12** = 1.2 inch | | | |
| | | **40:** M 10x1 | **Min:** 0.0 mm<br>**Max:** 230 mm | **Min:** 20 mm<br>**Max :** 250 mm | | | |
| | | **41:** M10x1 (Reverse Mount) | **05** = 5 mm | **30** = 30 mm | | | |

**Example = PDS-3300-08-30-33-80-10-00-01**

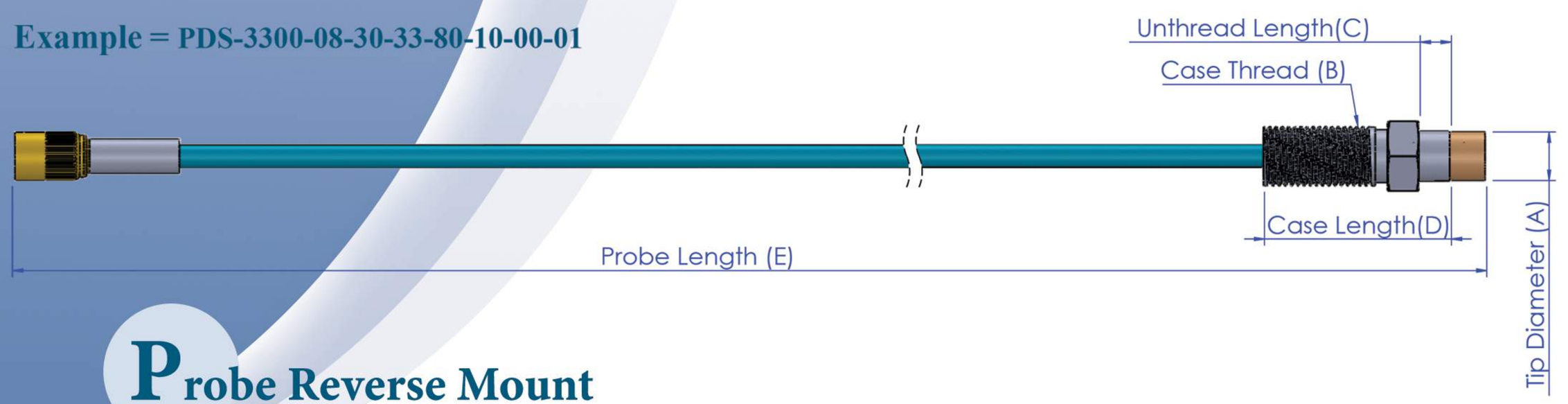


## Probe Reverse Mount

# 3300 XL & 7200 , 11 mm Proximity Probes

## How to Order a Probe model PDS

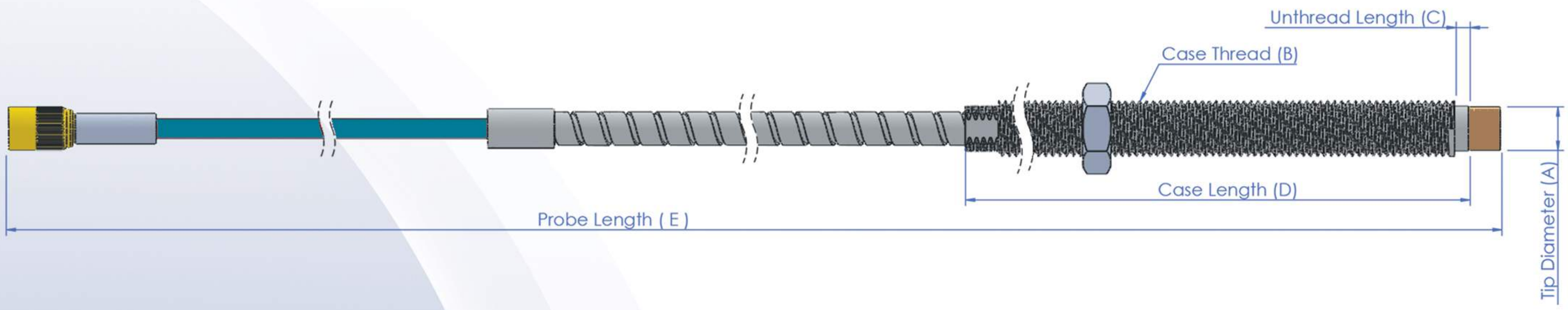


| Model No. | Tip Diameter A | Case Thread B | Unthread Length C | Case Overall Length D | Probe Length E | Armor F | EX Approval G |
|---|---|---|---|---|---|---|---|
| **PDS-XXXX** | **A XX** | **B XX** | **C XXX** | **D XXX** | **E XX** | **F XX** | **G XX** |
| **3300 XL**<br>Or<br>**7200** | **11:** 11 mm | **10:** 1/2"-20 | **Min:** 0.0 inch<br>**Max:** 8.8 inch<br>**Increments length:** 0.1 inch<br>**Example: 05** = 0.5 inch | **Min:** 0.8 inch<br>**Max:** 9.6 inch<br>**Increments length:** 0.1 inch<br>**Example: 12** = 1.2 inch | **05:** 0.5m (1.6 feet)<br>**10:** 1m (3.3 feet)<br>**15:** 1.5m (4.9 feet)<br>**20:** 2m (6.6 feet)<br>**50:** 5m (164 feet)<br>**90:** 9m (29.5 feet) | **00**: Non Armored<br>**01**: Armored | **00**: Not EX<br>**01**: EX Approval |
| | | **20:** 5/8"-18 | **Min:** 0.0 inch<br>**Max:** 8.8 inch<br>**Increments length:** 0.1 inch<br>**Example: 05** = 0.5 inch | **Min:** 0.8 inch<br>**Max:** 9.6 inch<br>**Increments length:** 0.1 inch<br>**Example: 12** = 1.2 inch | | | |
| | | **30:** 3/8"-24 (Reverse Mount) | **02** = 0.2 inch | **18** = 1.8 inch | | | |
| | | **40:** M14x1.5 | **Min:** 0.0 mm<br>**Max:** 230 mm | **Min:** 0.0 mm<br>**Max:** 250 mm | | | |
| | | **50:** M16x1.5 | **Min:** 0.0 mm<br>**Max:** 230 mm | **Min:** 0.0 mm<br>**Max:** 250 mm | | | |
| | | **60:** M10x1 (Reverse Mount) | **05** = 5 mm | **46** = 46 mm | | | |

**Example = PDS-3300-11-30-33-80-10-00-01**

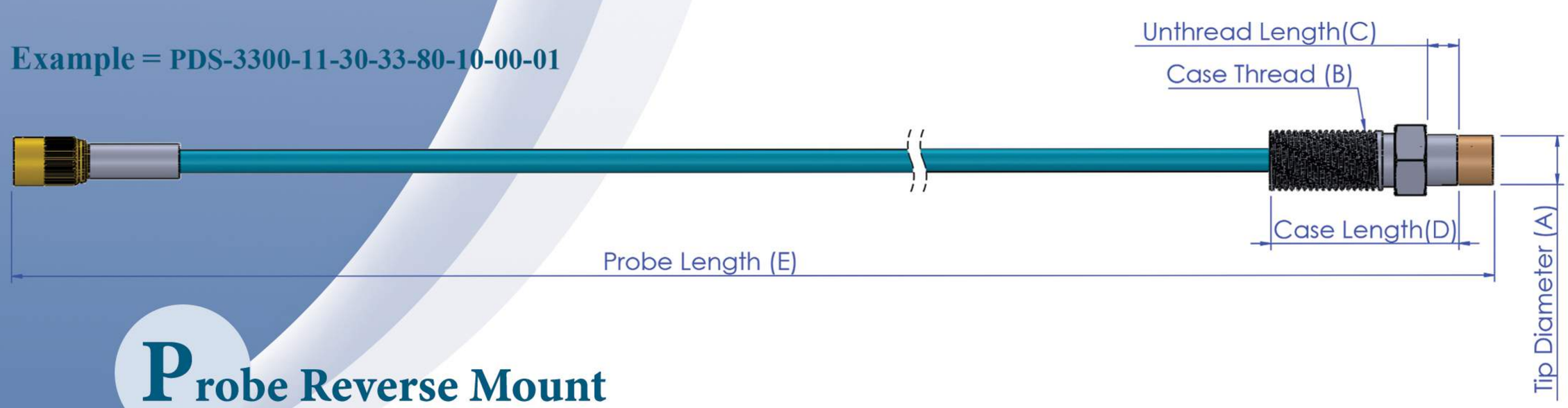


## Probe Reverse Mount

# 3300 NSV Proximity Probe

## How to Order a Probe model PDS

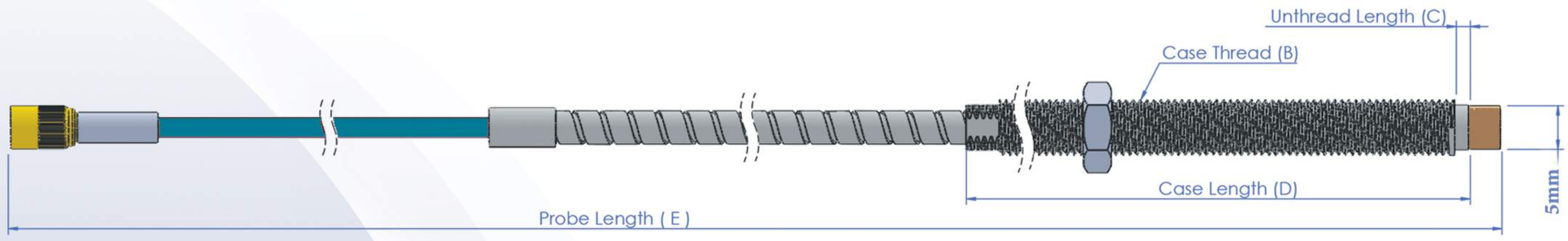


| Model No. | Tip Diameter | Case Thread B | Unthread Length C | Case Overall Length D | Probe Length E | Armor F | EX Approval G |
|---|---|---|---|---|---|---|---|
| **PDS-XXXX** | **A XX** | **B XX** | **C XXX** | **D XXX** | **E XX** | **F XX** | **G XX** |
| **3300 NSv** | **05:** 5 mm | **10:** 1/4"-28 | **Min:** 0.0 inch<br>**Max:** 8.8 inch<br>**Increments length:** 0.1 inch<br>**Example: 05 =** 0.5 inch | **Min:** 0.8 inch<br>**Max:** 9.6 inch<br>**Increments length:** 0.1 inch<br>**Example: 12** = 1.2 inch | **05:** 0.5m<br>(1.6 feet)<br><br>**10:** 1m<br>(3.3 feet)<br><br>**50:** 5m<br>(164 feet)<br><br>**70:** 7m<br>(23.0 feet) | **00**:<br>Non Armored<br><br>**01**:<br>Armored | **00**:<br>Not EX<br><br>**01**:<br>EX Approval |
| | | **20:** 3/8"-24 | **Min:** 0.0 inch<br>**Max:** 8.8 inch | **Min:** 0.8 inch<br>**Max:** 9.6 inch | | | |
| | | **21:** 3/8"-24 (Reverse Mount) | **02** = 0.2 inch | **12** = 1.2 inch | | | |
| | | **40:** M8x1 | **Min:** 0.0 mm<br>**Max:** 230 mm<br>**Increments Length** = 10 mm<br>**Example: 10 =** 10 mm | **Min :**20mm<br>**Max:** 250mm<br>**Increments Length** = 10mm<br>**Example: 80** = 80mm | | | |
| | | **50:** M10x1 | **Min:** 0.0 mm<br>**Max:** 230 mm | **Min :**20mm<br>**Max:** 250mm | | | |
| | | **51:** M 10x1 (Reverse Mount) | **05** = 5 mm | **30** = 30 mm | | | |

**Example = PDS-3300-08-30-33-80-10-00-01**

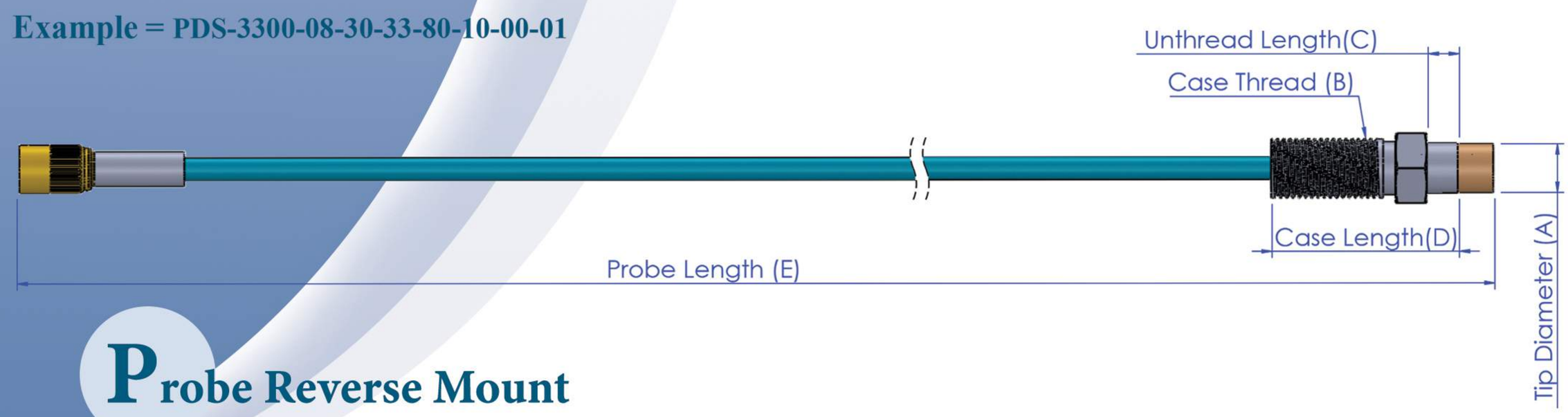


## Probe Reverse Mount

# Extension Cable

## How to Order an Extension Cable PDEC

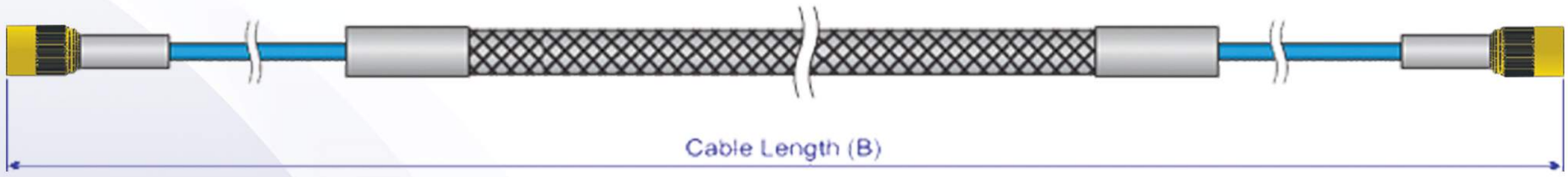


| Model | Cable Length A | Armored B | EX Approval C |
|---|---|---|---|
| **PDEC-XXXXXX** | **A XX** | **B XX** | **C XX** |
| **330130:** 5 & 8 mm 3300<br>**330730:** 11 mm 3300<br>**330930:** NSv 3300<br>**21747:** 5 & 8 mm 7200 | **30:** 3 m<br>**35:** 3.5 m<br>**40:** 4 m<br>**45:** 4.5 m<br>**60:** 6 m<br>**65:** 6.5 m<br>**70:** 7 m<br>**75:** 7.5 m<br>**80:** 8 m<br>**85:** 8.5 m | **00**: non Armored<br>**01**: Armored | **00**: Not EX<br>**01**: EX Approval |

Note 1: Bently 3300 NSv Cable Length just could be 4 m & 4.5 m & 6 m & 6.5 m.

**Example = PDEC-3300-40-00-01**

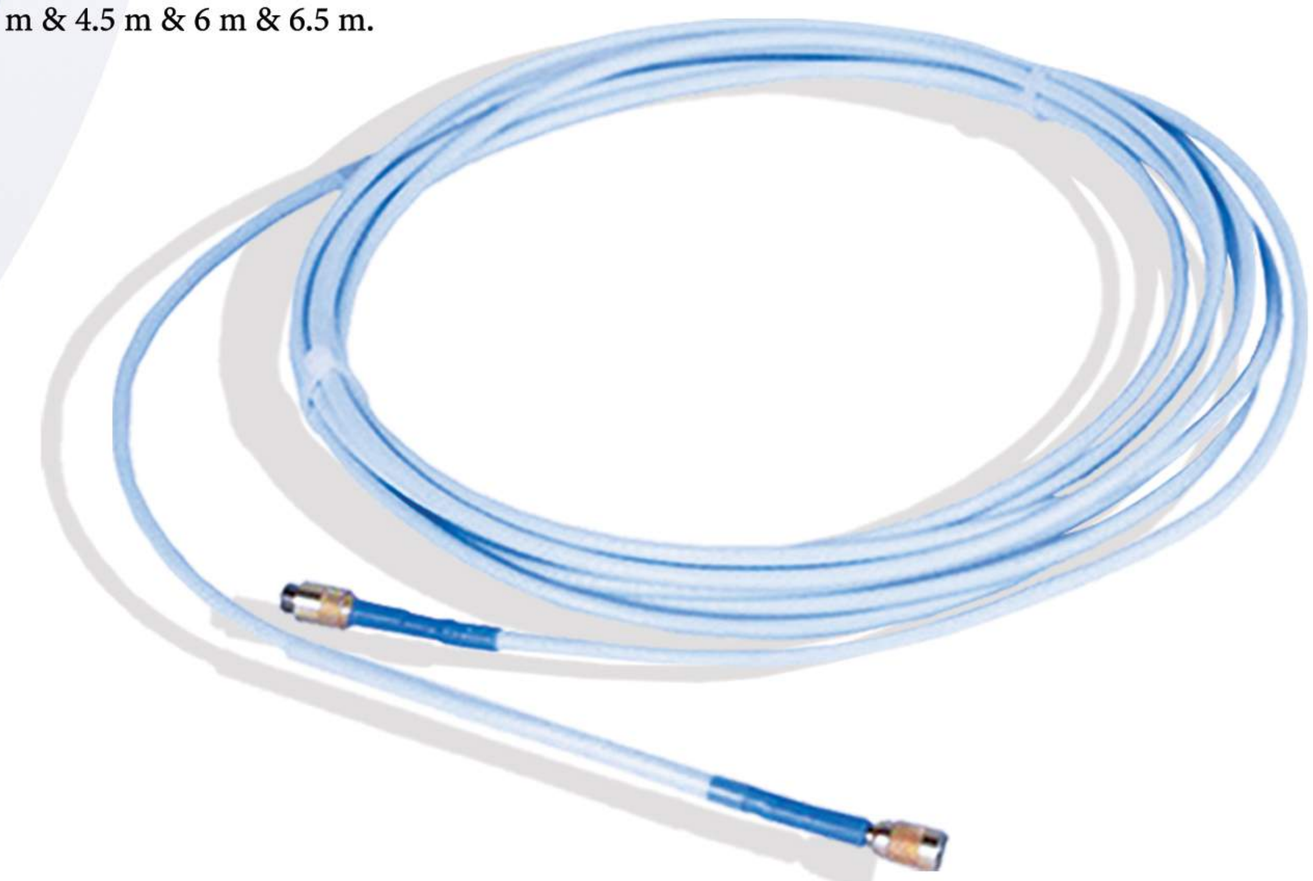

# Proximity Probe Driver

## How to Order Proximity Probe Driver Model PDP

| Type of Proximity<br>A | System Length<br>B | Ex Approval<br>C | Mounting Option<br>D |
|---|---|---|---|
| **A XX** | **B XX** | **C XX** | **D XX** |
| **01:** 5 & 8 mm Bently Nevada 3300 XL | **10:** 1 m | **00:** Note EX | **00:** No mounting |
| **02:** 5 & 8 mm 7200 Bently Nevada | **50:** 5 m | **01:** EX | **01:** Din Mount |
| **03:** 11mm Bently Nevada 3300 XL | **70:** 7 m | | **02:** Panel mount |
| **04:** Metrix 3000/Bently Nevada 3000 | **90:** 9 m | | |
| **05:** Bently Nevada 3300 NSv | | | |

Note 1: Bently 3300 NSv System Length Just could be 5 m & 7 m.

**Example = PDP-01-90-01-02**

## TEST REPORT COVER

| | |
|---|---|
| ExTR Reference Number..... : | TH1-50015 |
| Prepared by + signature (ExTL)..... : | M. Ghanbariha |
| Reviewed by + signature (ExTL) ... : | S. Jamshidi |
| Approved by + signature (ExTL).... : | S.M. Mirsadri |
| Date of issue ..... : | May 31, 2021 |
| Ex Testing Laboratory (ExTL)..... : | Ex EPIL |
| Address ..... : | Kavosh Research City, Supa blv, 8th km . Karaj-Qazvin freeway , Iran. |
| Applicant's name ..... : | Petro Davvar Energy Pajouhan co. |
| Address ..... : | Unit 13,4nd Floor, No 223 , No 431 Building, North Khosh Junction, Azadi Street, Tehran, IRAN. |
| Standards ..... : | EN 60079-0:2012 + A11:2013; EN 60079-7:2015 |
| Test procedure..... : | EN 60079-0:2012 + A11:2013; EN 60079-7:2015 |
| Product..... : | Proximitor |
| Model/type reference.....: | Proximity Probe Driver: PDP<br>Extension Cable: PDEC (Length: Max. 9m)<br>Probe: PDS |
| Code (e.g. Ex II T ).....: | Ex ec IIA T5 Gc |
| Rating .....: | Rated voltage: -24Vdc<br>Rated current: Max. 140 mA<br>Rated power: Max.900 mW |

E.P.I.L. Technical Department ISO IEC 17025 Accredited Lab



*This report should not be reproduced in extracts without written approval by EPIL.*
*Test results pertain to the tested sample only.*
*Not Valid Without Lab Stamp.*

**Office**: Unit 12, No.2, Boujari Sefat Dead-End, Corner of Fariman St., Bozorgmehr St., Vali-Asr Ave., Tehran-Iran
Postal Code: 1416854523 Tel: 021-61971 Fax: 021-66174283
**Lab**: Kavosh Reaserch City, Supa Blvd., 8th km of karaj-Qazvin Freeway, Iran
Tel: 026-34766700-14 Fax: 026-34766715
info@eepil.com www.eepil.com

# Calibration Report

| PETRO DAVVAR ENERGY | **Quality Control Department**<br>Calibration Report | Date: 1400/05/03<br>Report No.: -----<br>Page: 1 |
|---|---|---|

## Channel Accuracy

Incremental Scale Factor (ISF) Referenced to 7.87 mV Per micrometer (200 mV per mil)

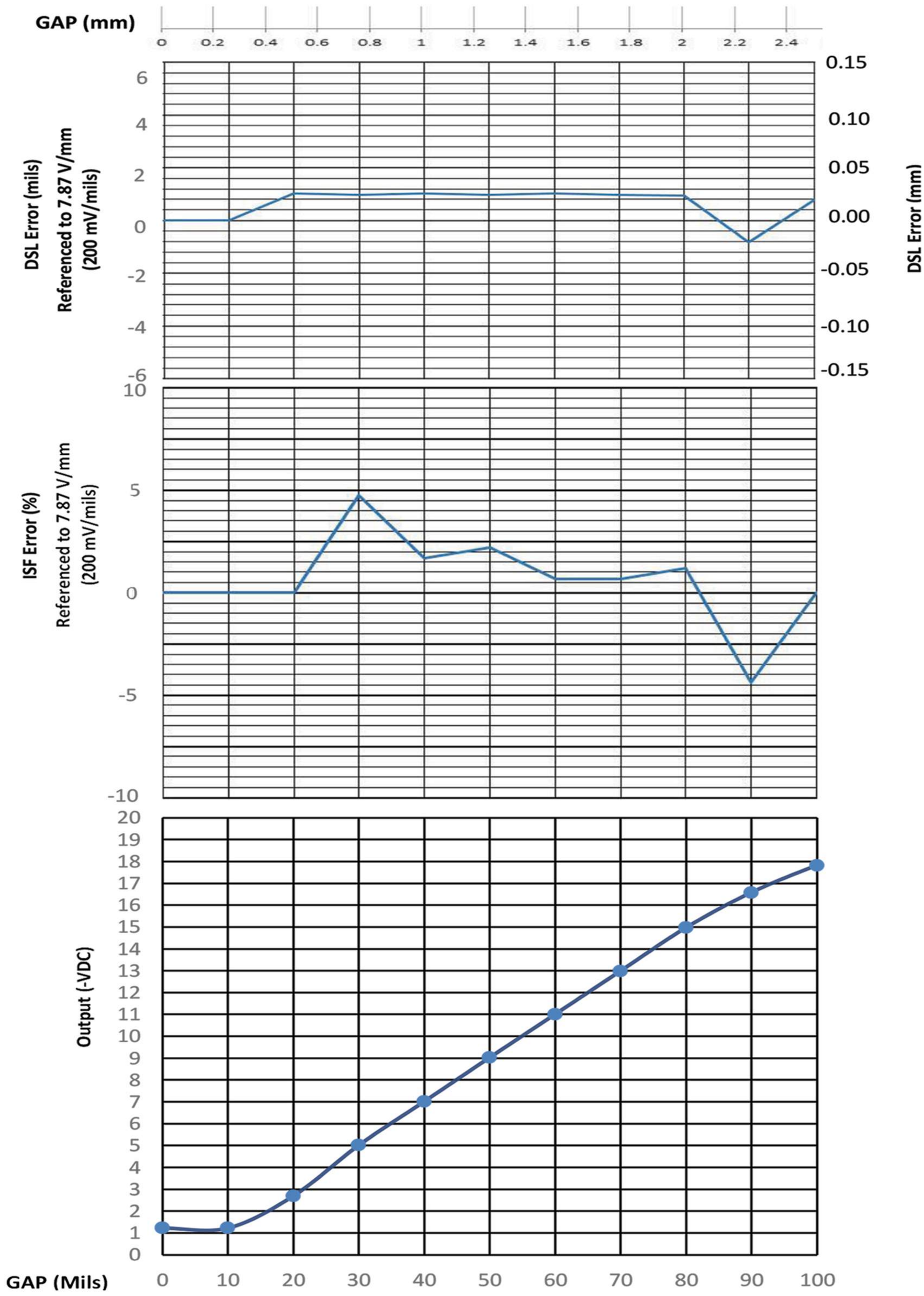


| | |
|---|---|
| **Extension Cable P/N:** 330130-080-00-01 Bently Nevada | **Scale Factor:** 7.87 mv/µm |
| **Probe P/N:** 330101-00-12-10-02-05 Bently Nevada | **Target Material:** AISI4140 |
| **Proximitor Model:** PDP-01-90-01-02<br>**Replace P/N:** 330180-90-05 Bently Nevada | **Proximitor S/N:** 2106047<br>**Standard:** API 670 |

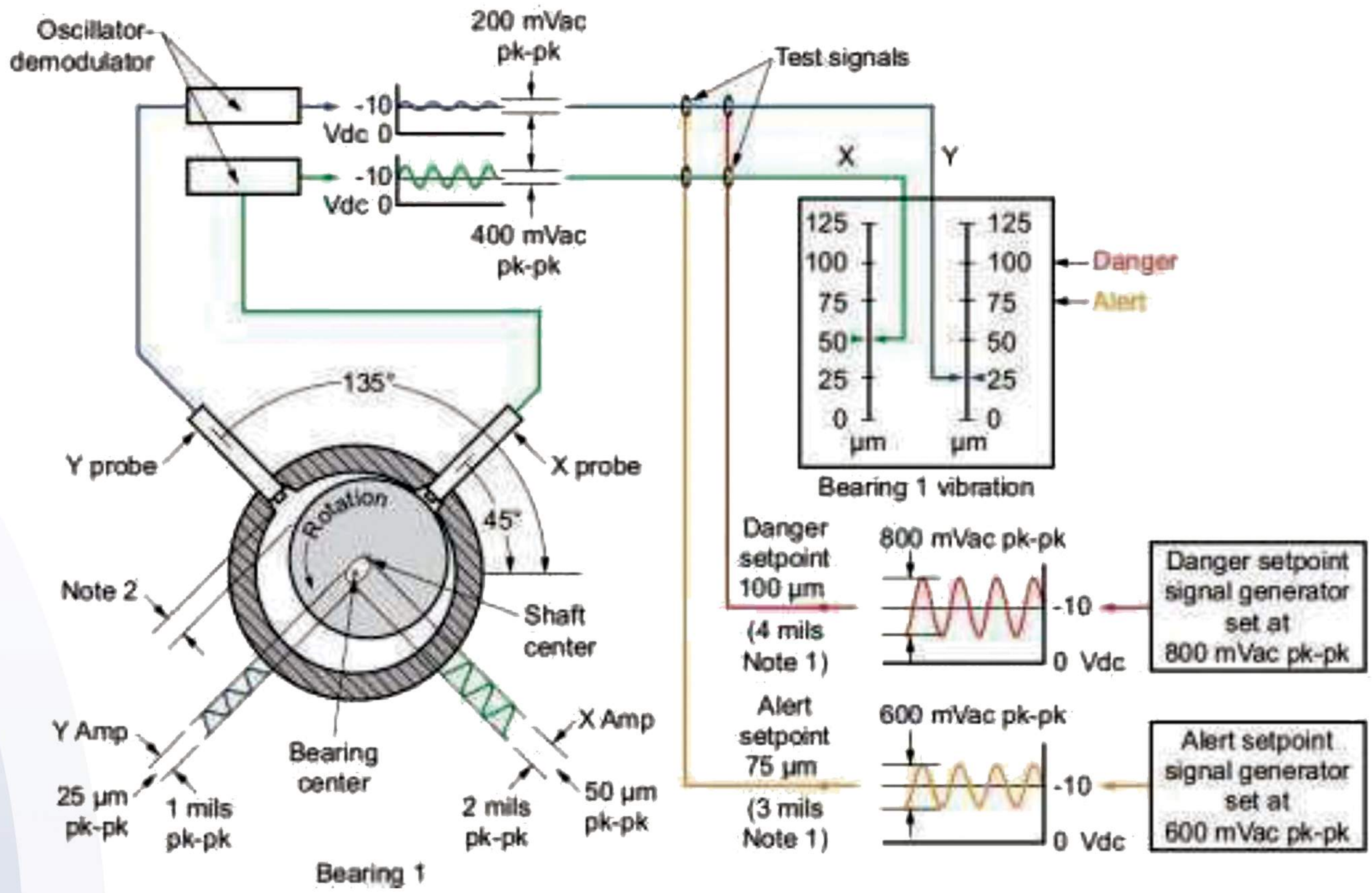
Oscillator-demodulator
200 mVac pk-pk
Test signals
-10
Vdc 0
-10
Vdc 0
400 mVac pk-pk
X
Y
125
100
75
50
25
0
µm
Danger
Alert
Bearing 1 vibration
135°
Y probe
X probe
Rotation
45°
Note 2
Shaft center
Y Amp
X Amp
Bearing center
25 µm pk-pk
1 mils pk-pk
2 mils pk-pk
50 µm pk-pk
Bearing 1
Danger setpoint 100 µm
(4 mils Note 1)
800 mVac pk-pk
-10
0 Vdc
Danger setpoint signal generator set at 800 mVac pk-pk
Alert setpoint 75 µm
(3 mils Note 1)
600 mVac pk-pk
-10
0 Vdc
Alert setpoint signal generator set at 600 mVac pk-pk

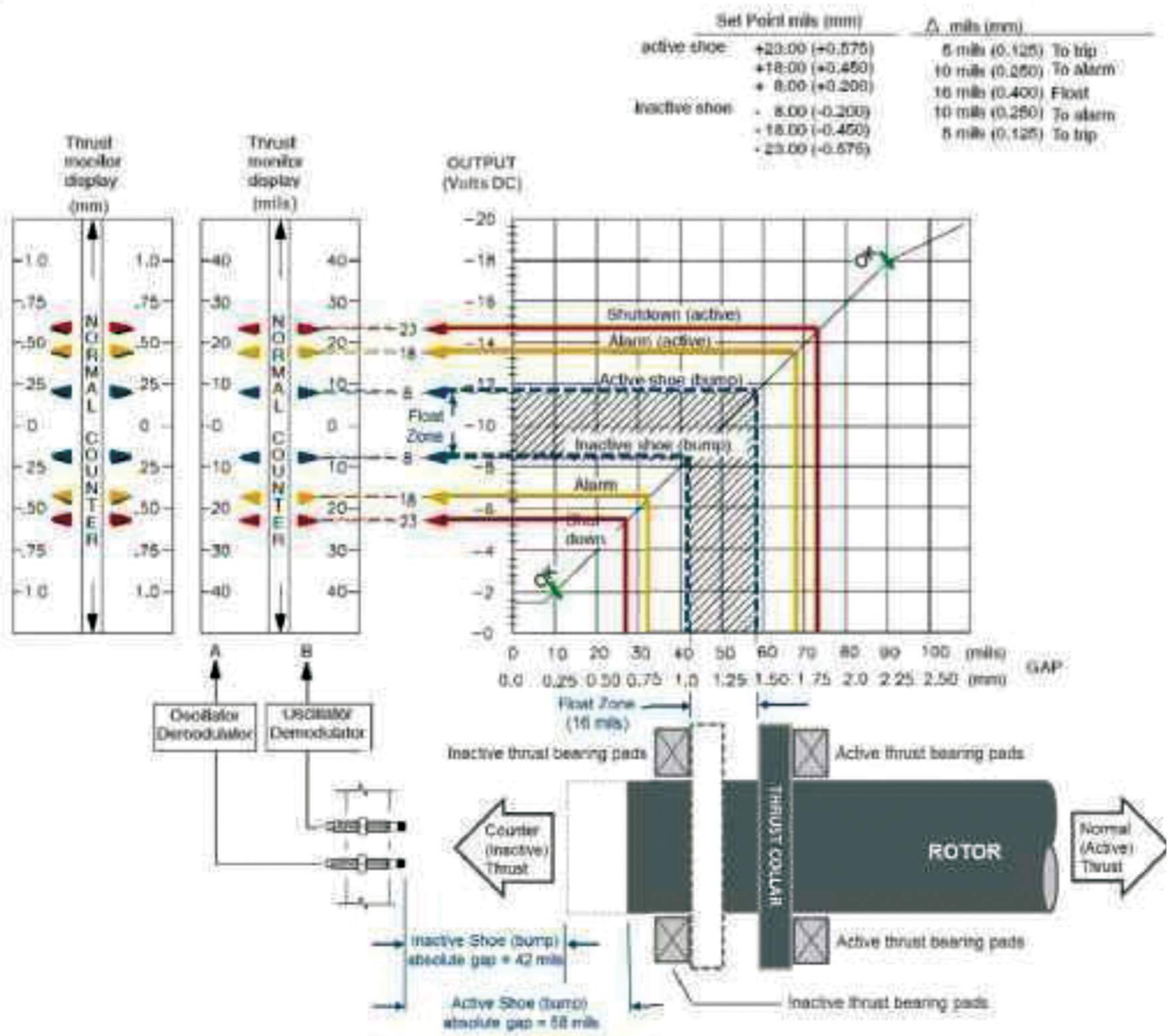
Set Point mils (mm)
Δ mils (mm)
active shoe
+23.00 (+0.575)
+18.00 (+0.450)
+ 8.00 (+0.200)
inactive shoe
- 8.00 (-0.200)
- 18.00 (-0.450)
- 23.00 (-0.575)
6 mils (0.125) To trip
10 mils (0.250) To alarm
16 mils (0.400) Float
10 mils (0.250) To alarm
6 mils (0.125) To trip
Thrust monitor display (mm)
Thrust monitor display (mils)
OUTPUT (Volts DC)
NORMAL COUNTER
Shutdown (active)
Alarm (active)
Active shoe (bump)
Inactive shoe (bump)
Alarm
Shut down
Float Zone
GAP
Oscillator Demodulator
Oscillator Demodulator
Inactive thrust bearing pads
Active thrust bearing pads
Counter (Inactive) Thrust
THRUST COLLAR
ROTOR
Normal (Active) Thrust
Inactive Shoe (bump) absolute gap = 42 mils
Active Shoe (bump) absolute gap = 58 mils
Inactive thrust bearing pads

# PETRO DAVVAR ENERGY

If there is a will, there is a way...


www.davvarenergy.com

info@davvarenergy.com

+98 21 66578268

+98 21 66578375

Unit 13,4th Floor, 431 Building, Azadi Street, Tehran, Iran